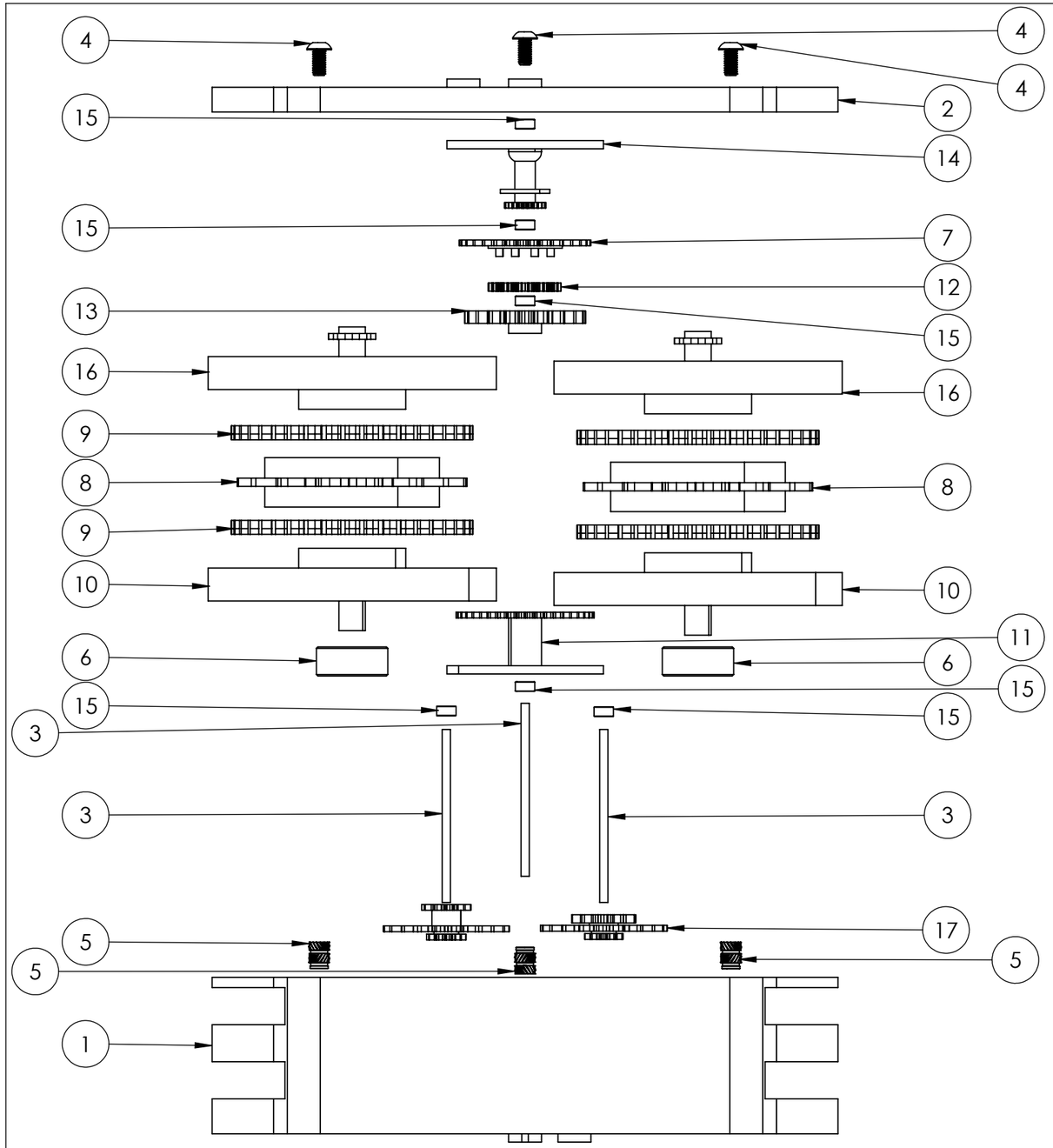

ITEM NO.	PART NAME	MATERIAL	QTY.
1	box	ABS Plastic	1
2	top	ABS Plastic	1
3	rod	ABS Plastic	3
4	92095A189: Button Head Hex Drive Screw	Steel	3
5	94459A170: Heat-Set Inserts for Plastic	Brass	3
6	4752N11: One-Way Locking Ball Bearing Clutch	Steel	2
7	carrier	ABS Plastic	1
8	freewheel	ABS Plastic	2
9	freewheel-gear	ABS Plastic	4
10	number-wheel-half	ABS Plastic	2
11	output-wheel	ABS Plastic	1
12	planet	ABS Plastic	4
13	ring	ABS Plastic	1
14	sun	ABS Plastic	1
15	7804K121- Stainless Steel Ball Bearing	Stainless Steel	6
16	number-wheel-half-dented	ABS Plastic	2
17	freewheel-to-output-wheel-left	ABS Plastic	1
18	freewheel-to-output-wheel-right	ABS Plastic	1

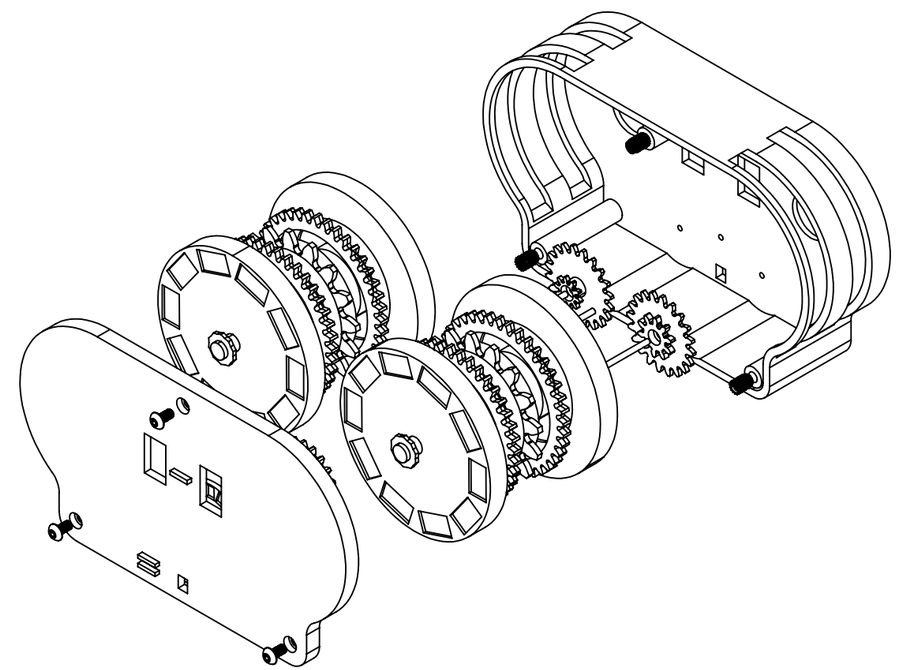

Drawn by: Aiden Ankrum	Sheet #: 0	# of Sheets: 15	Date: 12/14/2025	Scale: 1:1.6
Part name: -	Part #: -	Material: -		

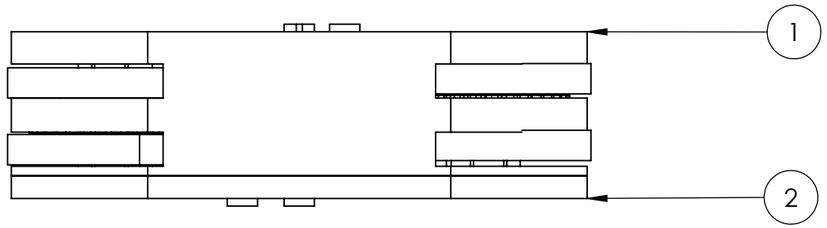

ITEM NO.	PART NAME	MATERIAL	QTY.
1	box	ABS PLASTIC	1
2	top	ABS PLASTIC	1
3	rod	ABS PLASTIC	3
4	92095A189: Button Head Hex Drive Screw	STEEL	3
5	94459A170: Heat-Set Inserts for Plastic	BRASS	3
6	4752N11: One-Way Locking Ball Bearing	STEEL	2
7	carrier	ABS PLASTIC	1
8	freewheel	ABS PLASTIC	2
9	freewheel-gear	ABS PLASTIC	4
10	number-wheel-half	ABS PLASTIC	2
11	output-wheel	ABS PLASTIC	1
12	planet	ABS PLASTIC	4
13	ring	ABS PLASTIC	1
14	sun	ABS PLASTIC	1
15	7804K121: Stainless Steel Ball Bearing	STAINLESS STEEL	6
16	number-wheel-half-dented	ABS PLASTIC	2
17	freewheel-to-output-wheel-left	ABS PLASTIC	1
18	freewheel-to-output-wheel-right	ABS PLASTIC	1

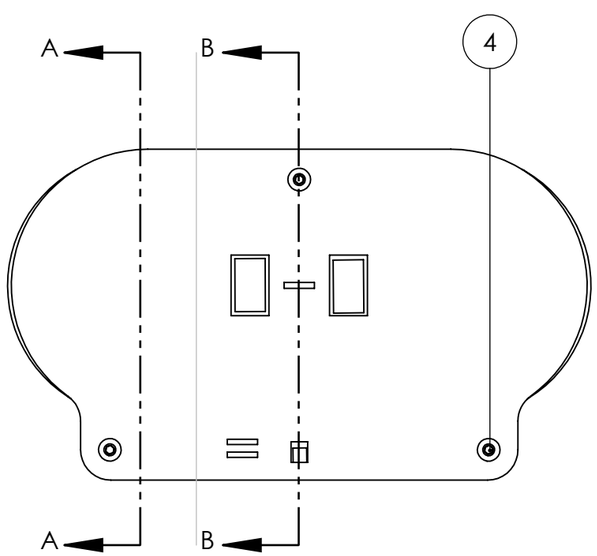

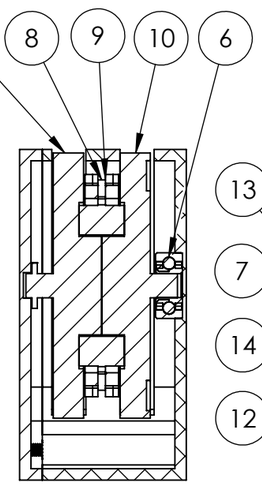

SECTION A-A
SCALE 1 : 2

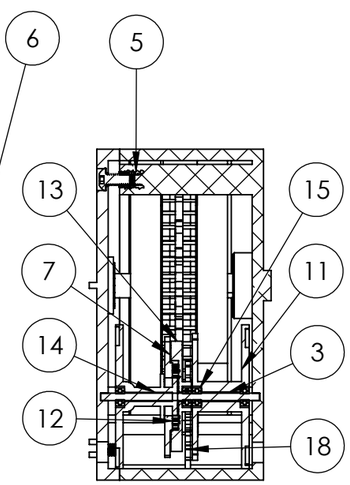

SECTION B-B
SCALE 1 : 2

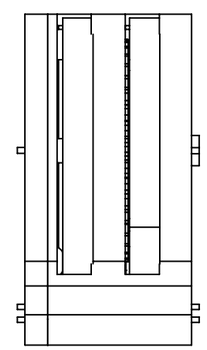

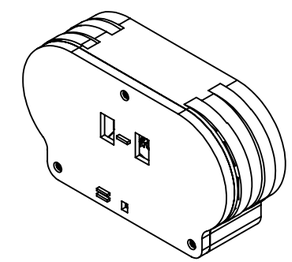

Drawn by: Aiden Ankrum	Sheet #: 1	# of Sheets 15	Date: 12/15/2025	Scale: 1:2
Part name: -	Part #: -	Material: -		

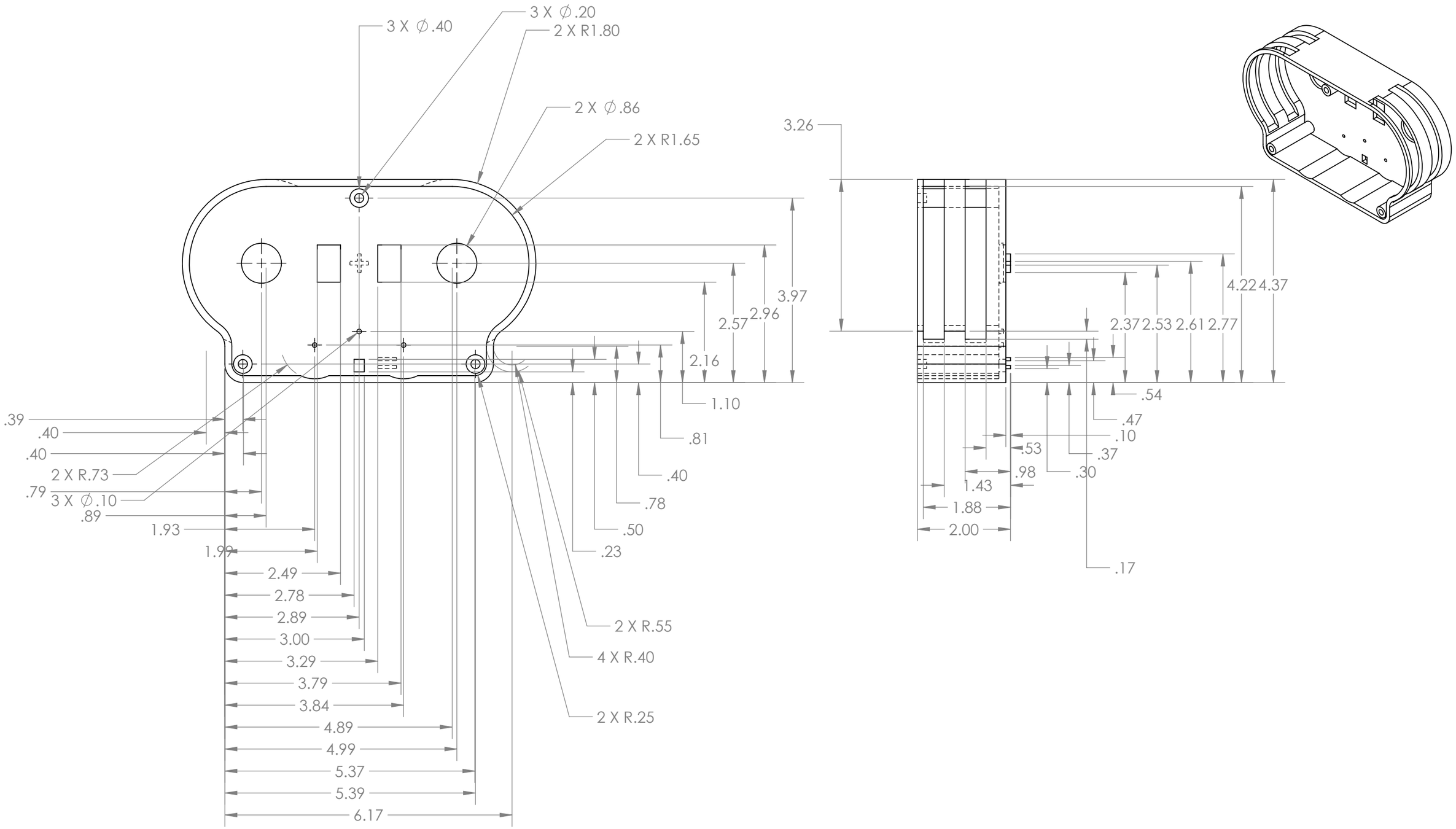

Drawn by: Aiden Ankrum	Sheet #: 2	# of Sheets 15	Date: 12/15/2025	Scale: 1:2
Part name: box	Part #: -	Material: ABS PLASTIC		

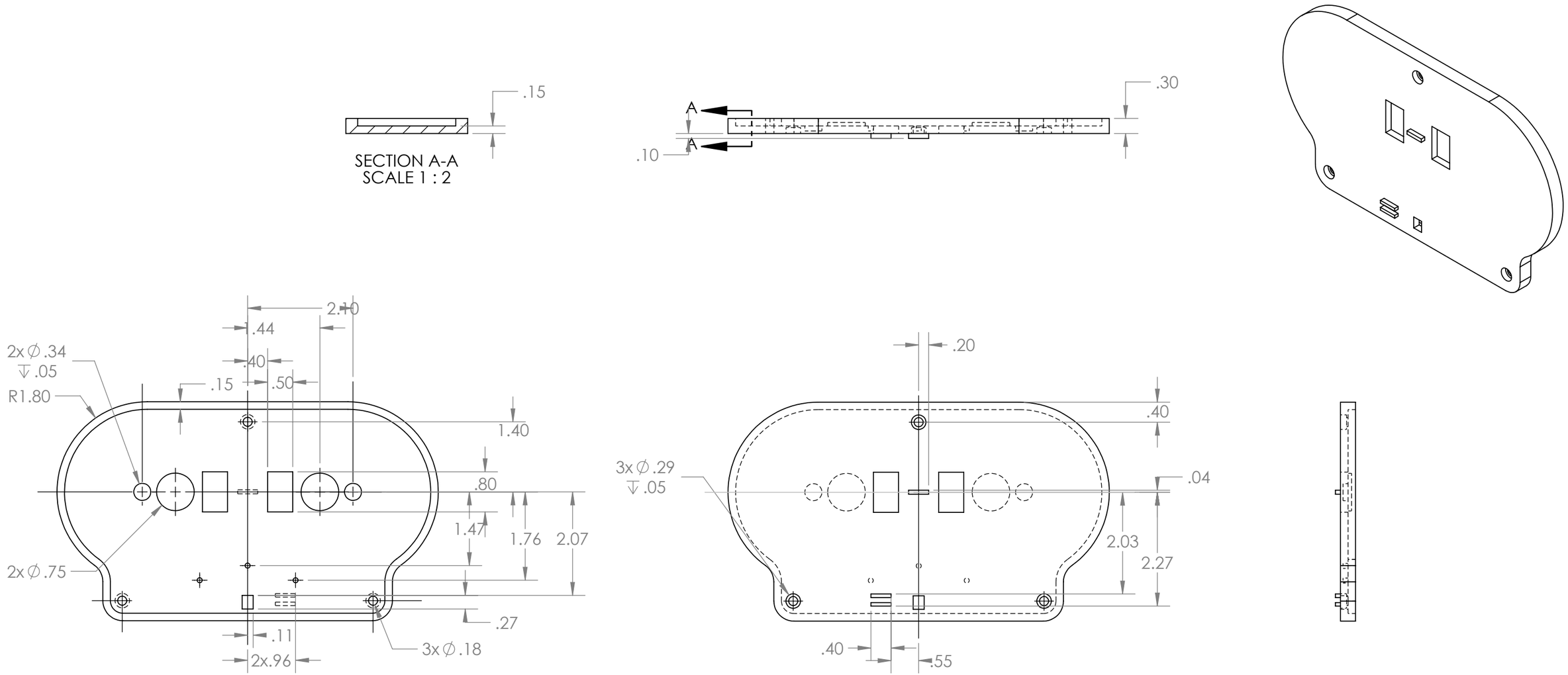

Drawn by:	Aiden Ankrum	Sheet #:	3	# of Sheets	15	Date: 12/15/2025	Scale: 1:2
Part name:	top	Part #:	-	Material:	ABS PLASTIC		

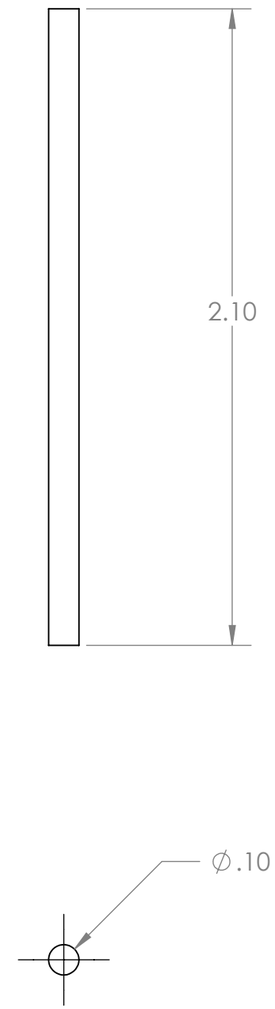

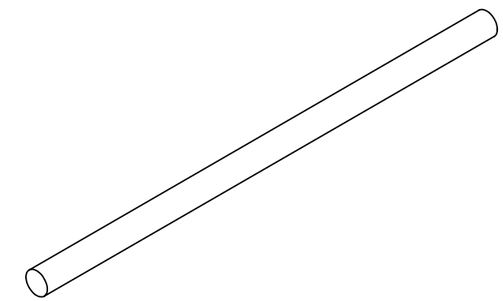

Drawn by: Aiden Ankrum	Sheet #: 4	# of Sheets 15	Date: 12/15/2025	Scale: 2:1
Part name: rod	Part #: -	Material: ABS PLASTIC		

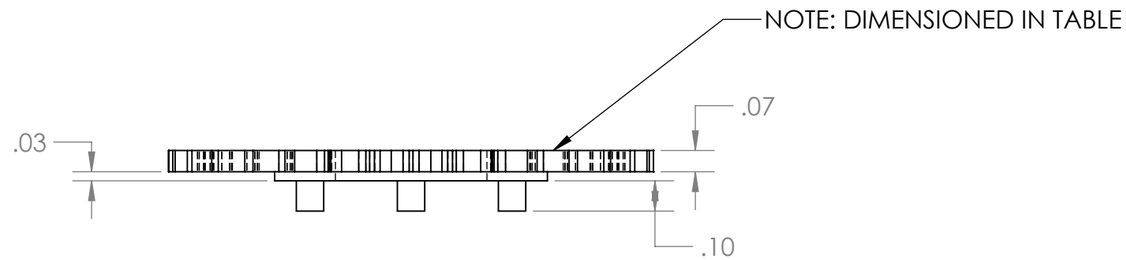

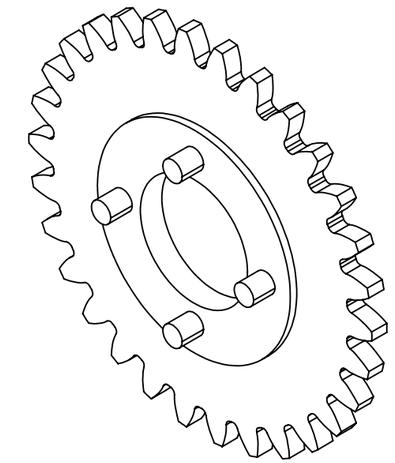

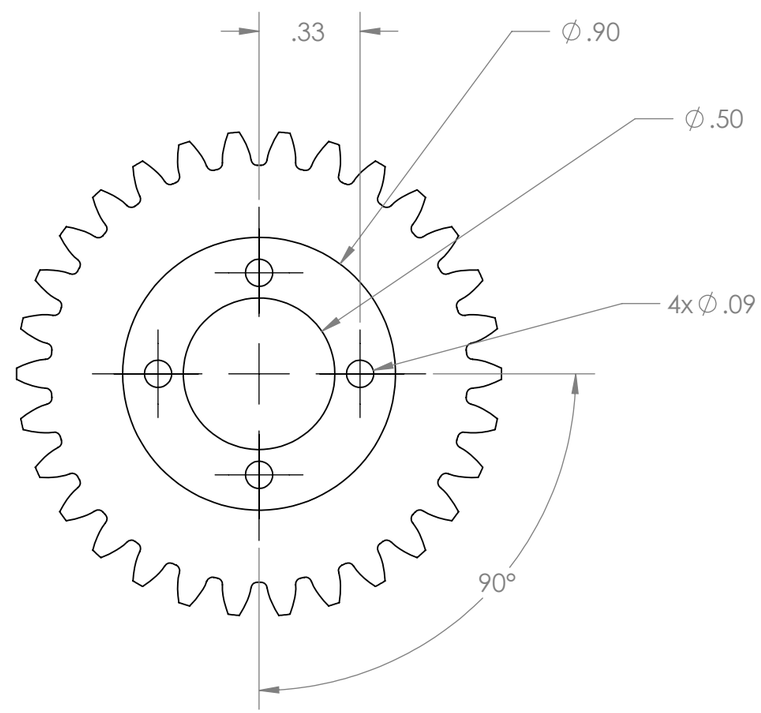

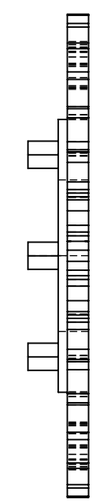

DIMENSIONS OF GEAR:

Pitch Diamter	1.5
Diametral Pitch	20
Teeth	30
Pressure Angle	20
Face Width	0.07

Drawn by: Aiden Ankrum	Sheet #: 5	# of Sheets 15	Date: 12/15/2025	Scale: 1:2
Part name: carrier	Part #: -	Material: ABS PLASTIC		

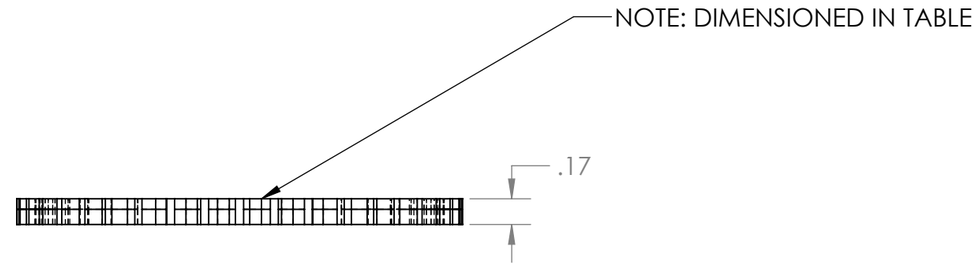

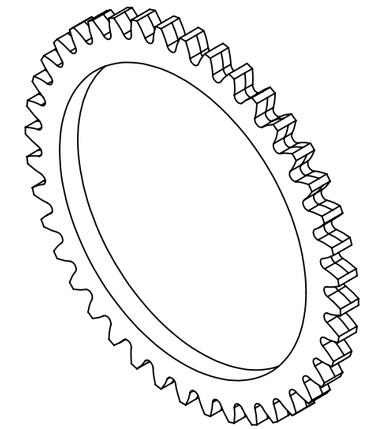

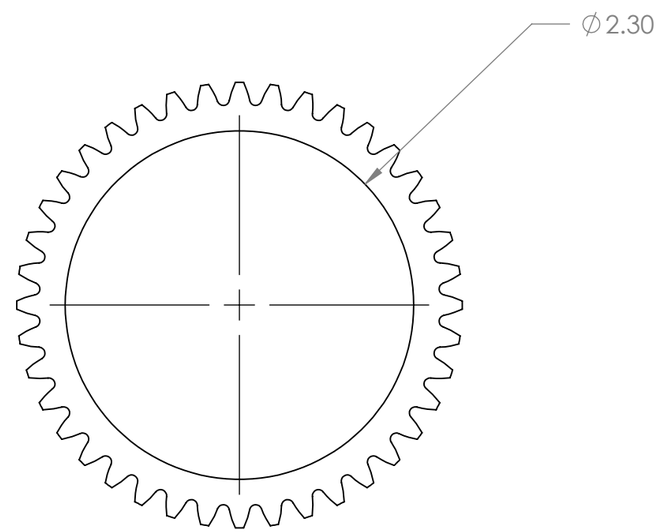

DIMENSIONS OF GEAR:

Pitch Diamter	2.8
Diametral Pitch	14.2857
Teeth	40
Pressure Angle	20
Face Width	0.07

Drawn by: Aiden Ankrum	Sheet #: 6	# of Sheets 15	Date: 12/15/2025	Scale: 1:1
Part name: freewheel-gear	Part #: -	Material: ABS PLASTIC		

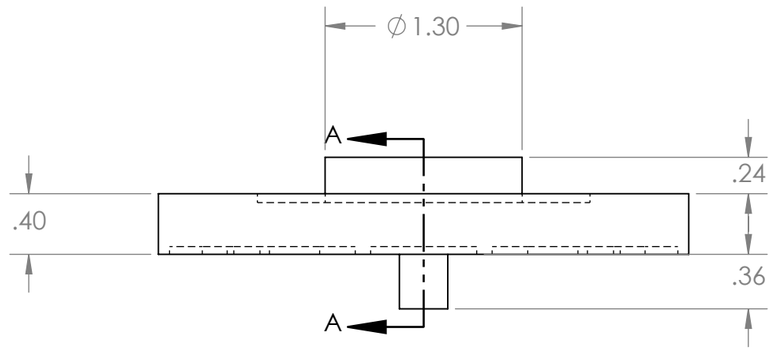

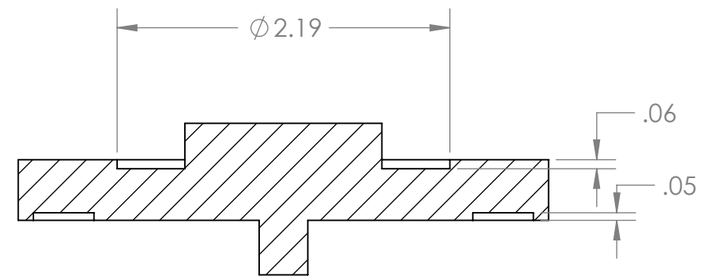

SECTION A-A

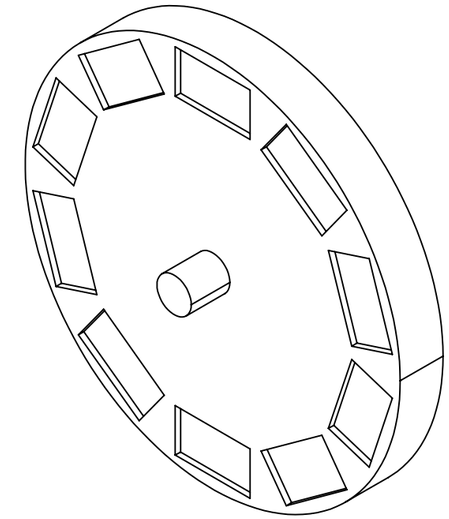

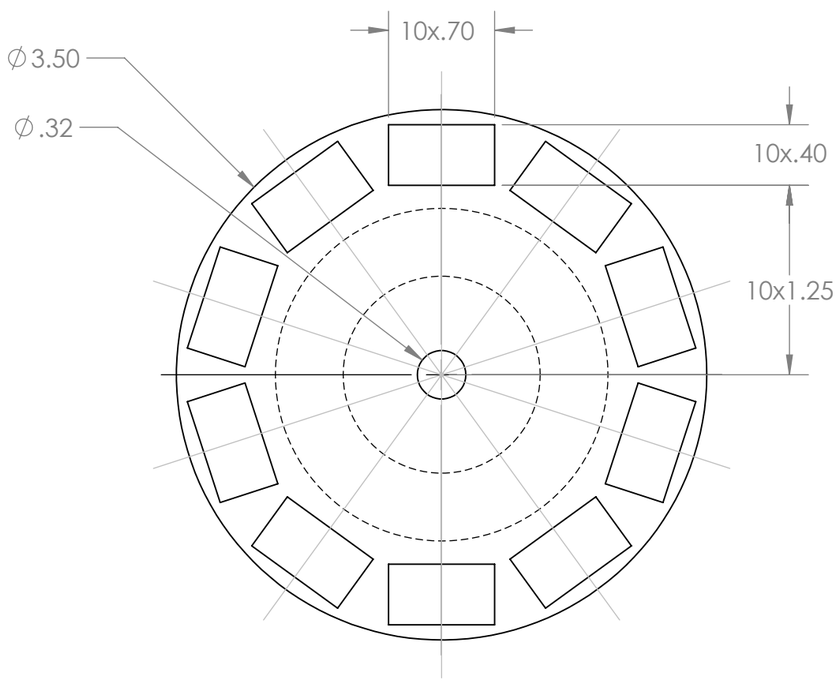

Drawn by:	Aiden Ankrum	Sheet #:	7	# of Sheets	15	Date: 12/15/2025	Scale: 1:1
Part name:	number-wheel-half	Part #:	-	Material:	ABS PLASTIC		

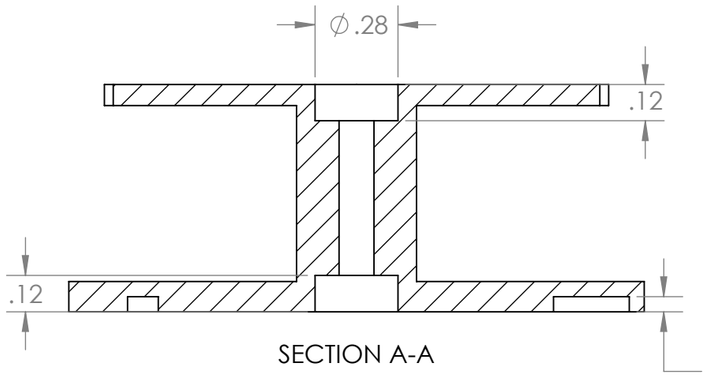

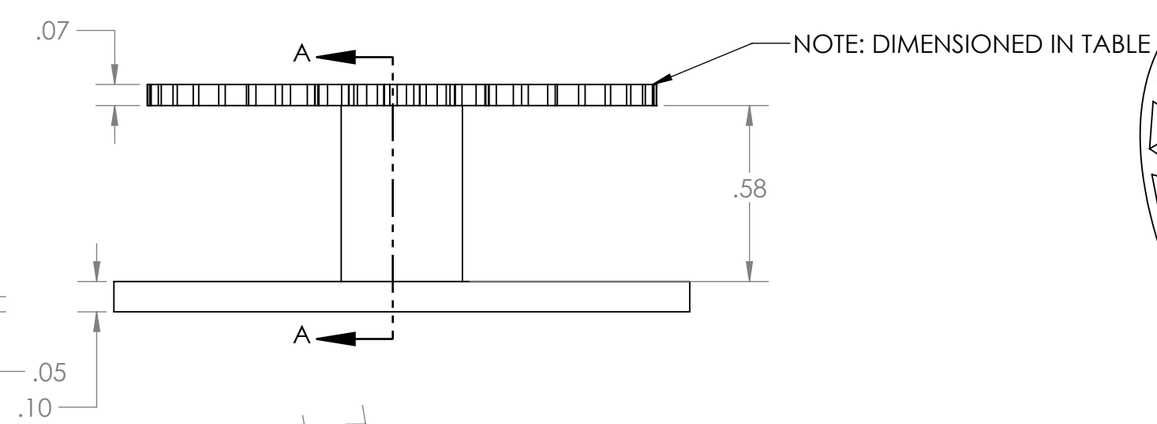

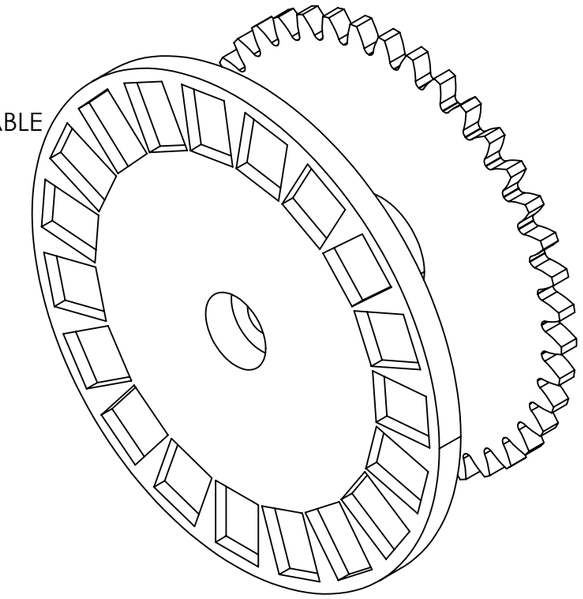

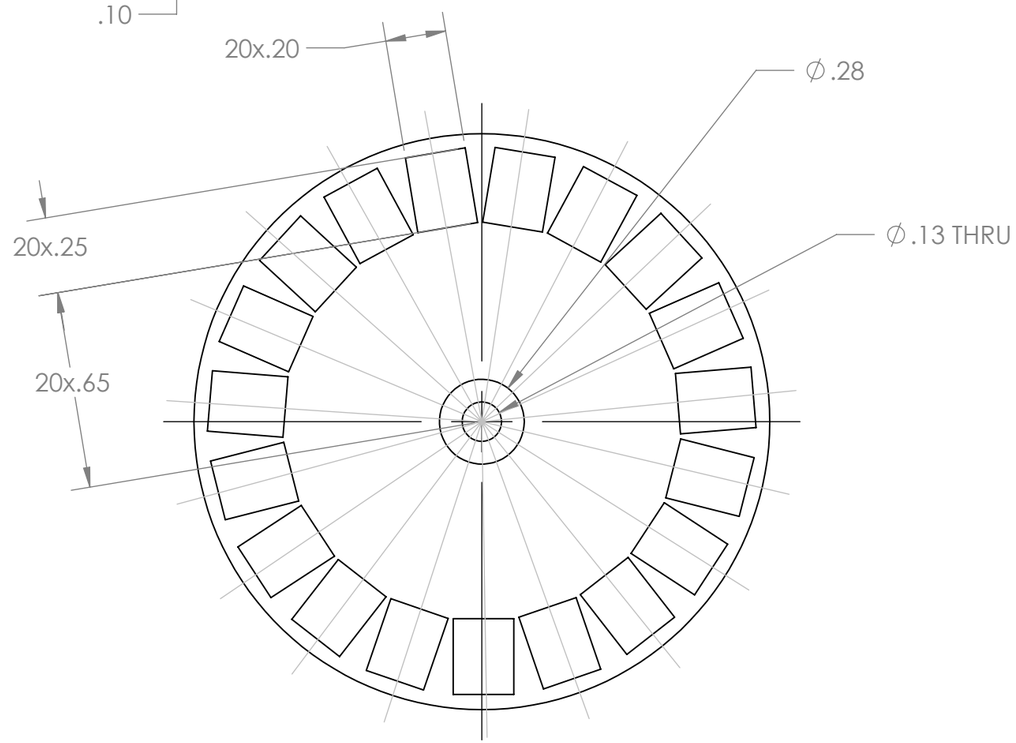

DIMENSIONS OF GEAR:

Pitch Diamter	1.6
Diametral Pitch	25
Teeth	40
Pressure Angle	20
Face Width	0.07

Drawn by:	Aiden Ankrum	Sheet #:	8	# of Sheets	15	Date: 12/15/2025	Scale: 1:2
Part name:	output-wheel	Part #:	-	Material:	ABS PLASTIC		

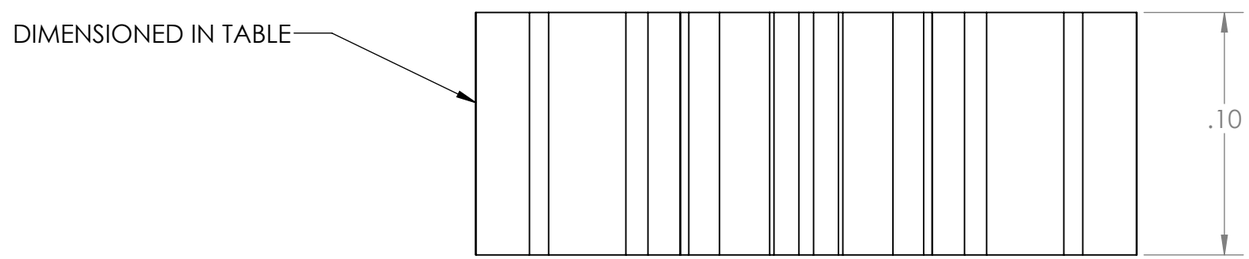

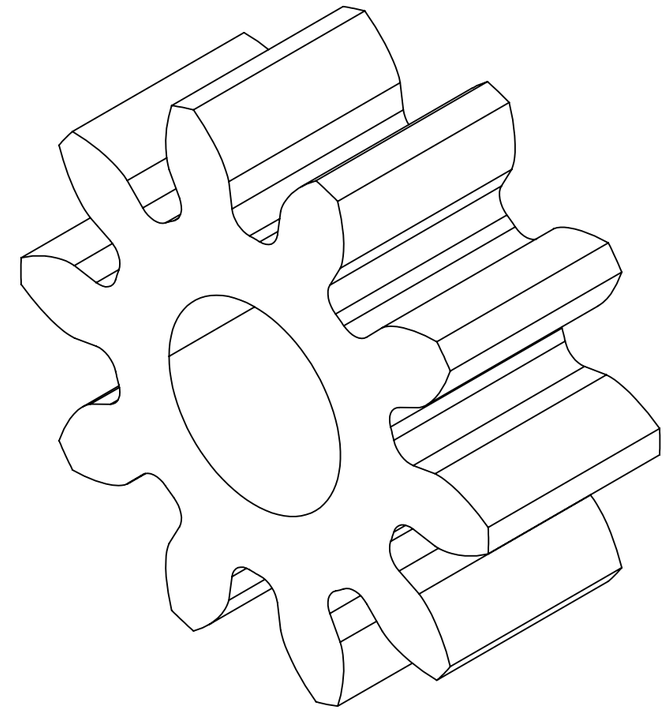

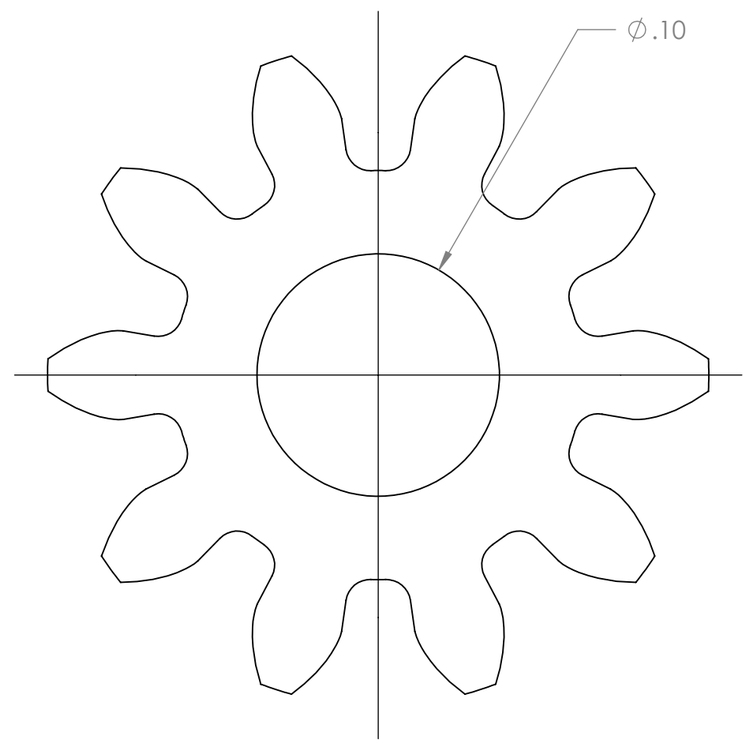

DIMENSIONS OF GEAR:

Pitch Diamter	.2
Diametral Pitch	44
Teeth	10
Pressure Angle	20
Face Width	0.07

Drawn by: Aiden Ankrum	Sheet #: 9	# of Sheets 15	Date: 12/15/2025	Scale: 16:1
Part name: planet	Part #: -	Material: ABS PLASTIC		

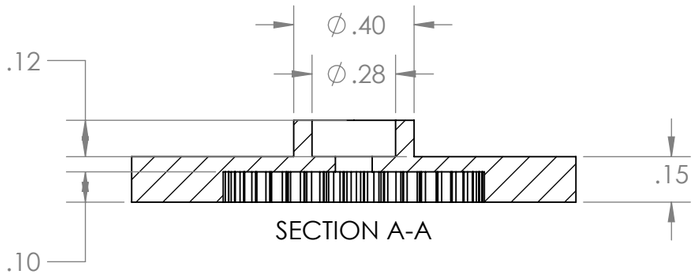

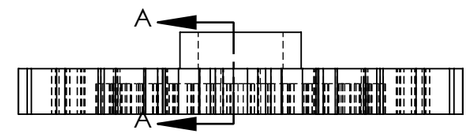

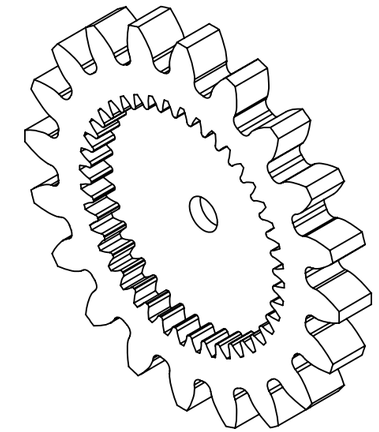

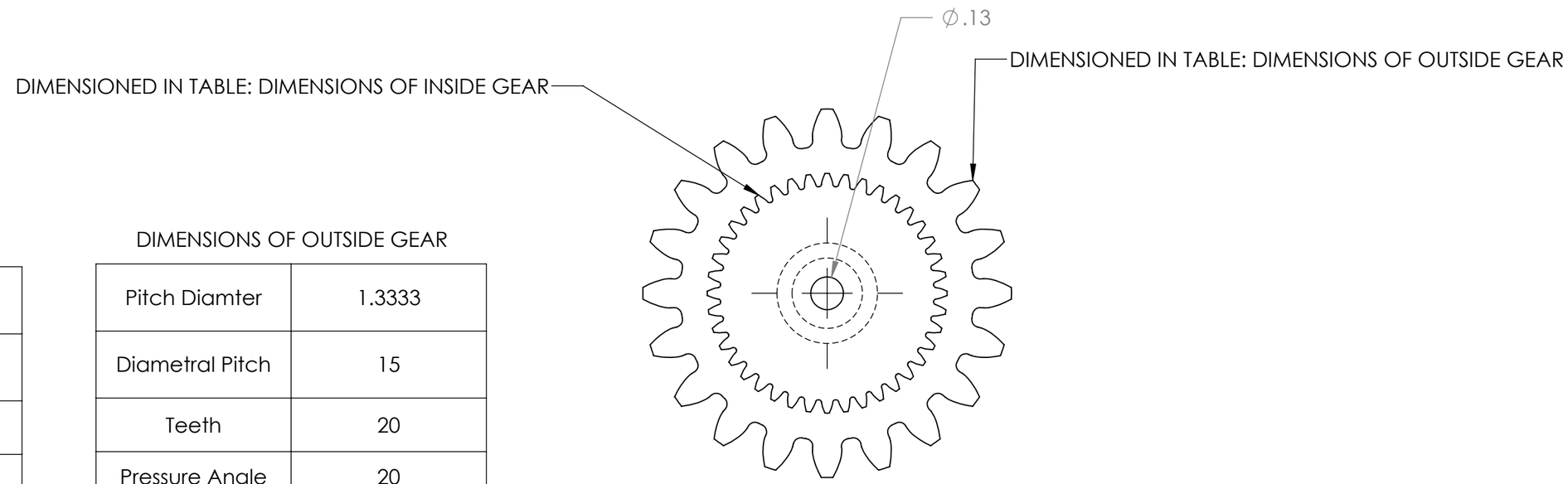

DIMENSIONS OF INSIDE GEAR

Pitch Diamter	1
Diametral Pitch	44
Teeth	40
Pressure Angle	20
Face Width	0.07

DIMENSIONS OF OUTSIDE GEAR

Pitch Diamter	1.3333
Diametral Pitch	15
Teeth	20
Pressure Angle	20
Face Width	0.07

Drawn by: Aiden Ankrum	Sheet #: 10	# of Sheets 15	Date: 12/15/2025	Scale: 2:1
Part name: ring	Part #: -	Material: ABS PLASTIC		

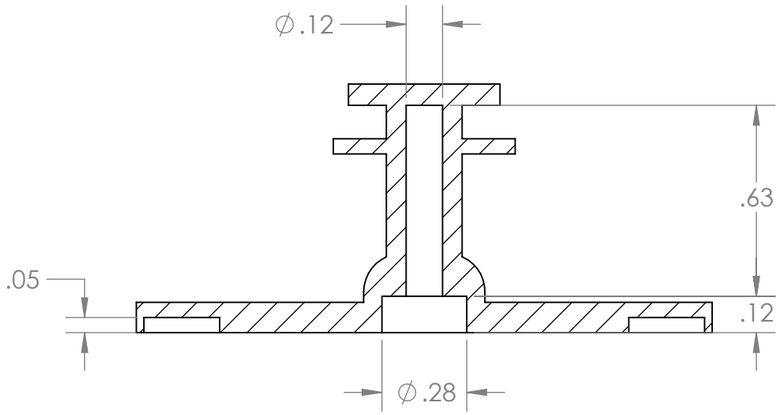

SECTION A-A

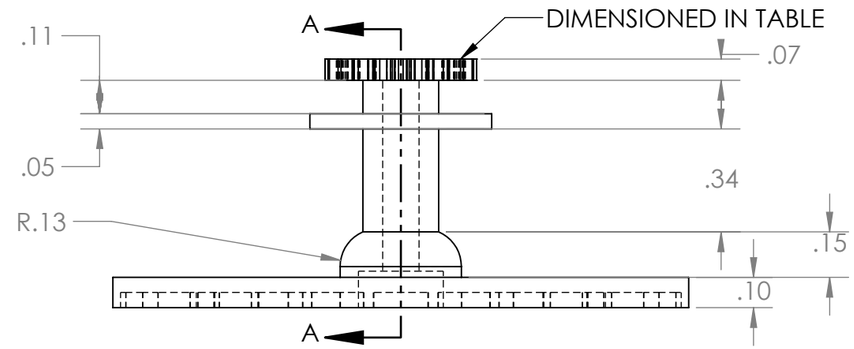

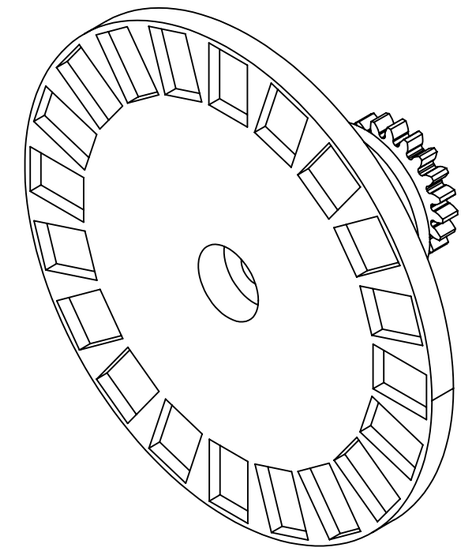

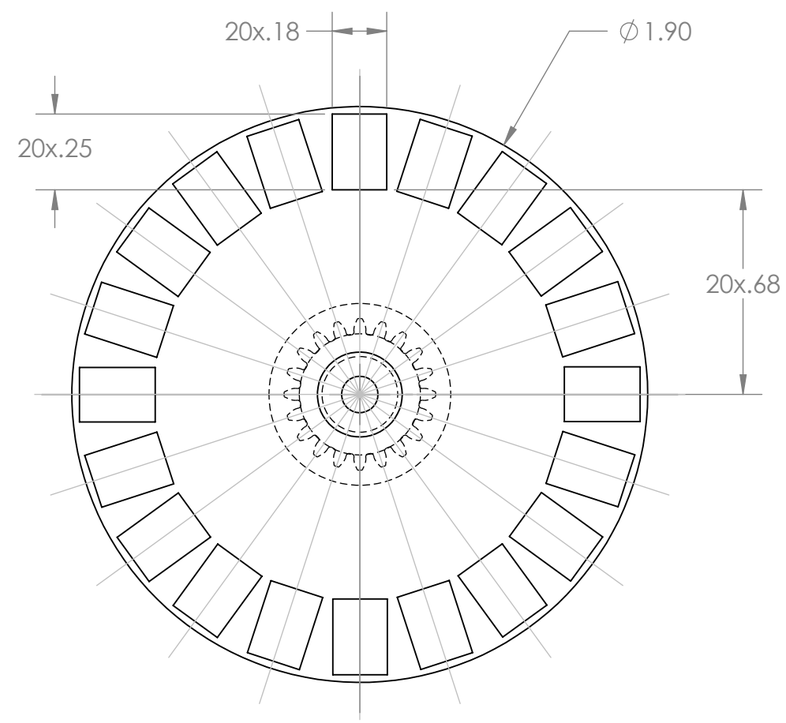

DIMENSIONS OF GEAR:

Pitch Diamter	.5
Diametral Pitch	44
Teeth	20
Pressure Angle	20
Face Width	0.07

Drawn by: Aiden Ankrum	Sheet #: 11	# of Sheets 15	Date: 12/15/2025	Scale: 2:1
Part name: sun	Part #: -	Material: ABS PLASTIC		

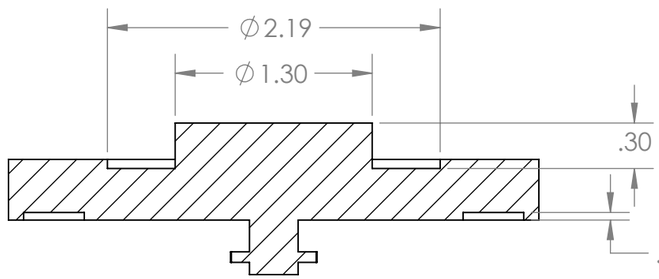

SECTION A-A

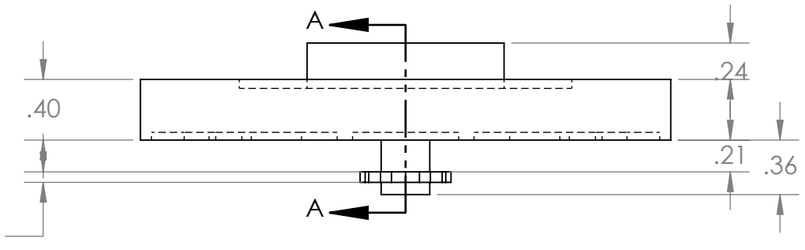

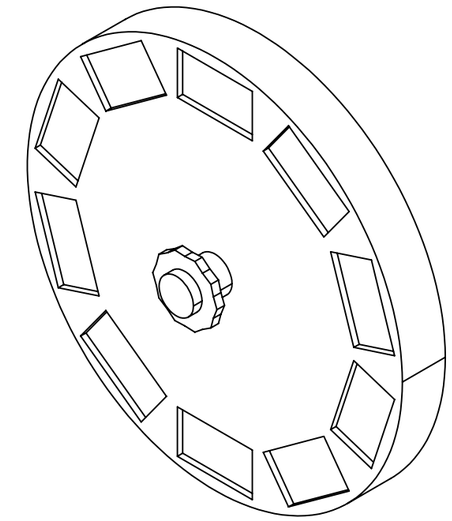

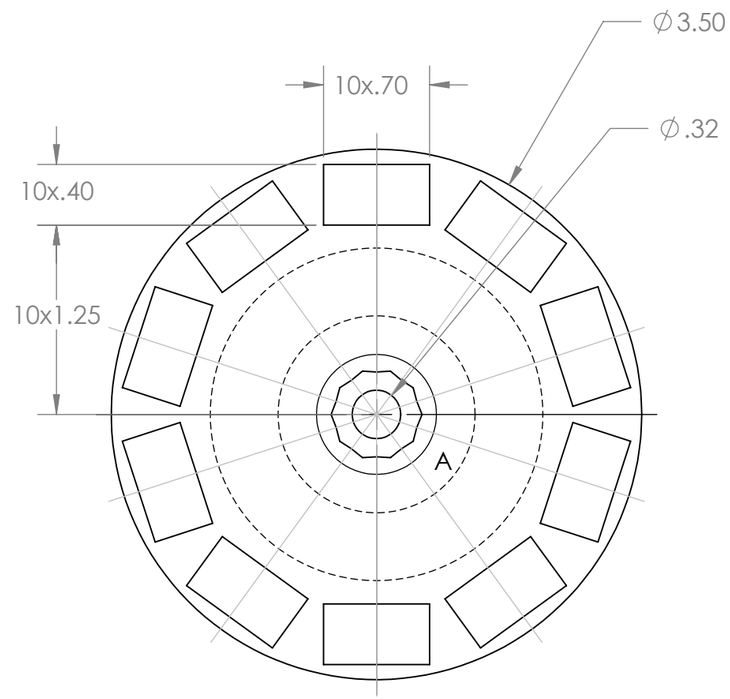

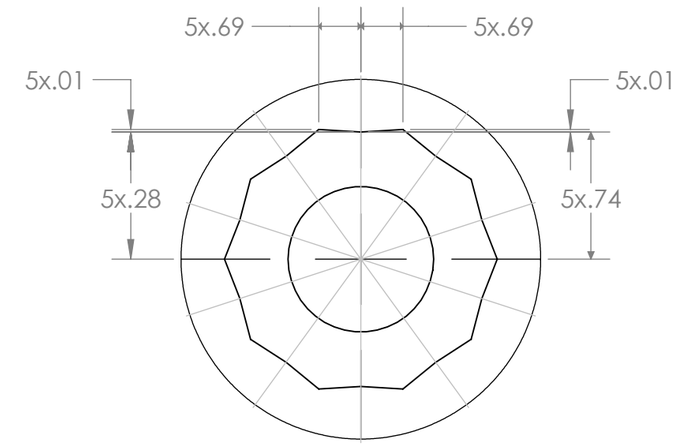

DETAIL A
SCALE 3 : 1

Drawn by:	Aiden Ankrum	Sheet #:	12	# of Sheets	15	Date: 12/15/2025	Scale: 1:1
Part name:	number-wheel-dented	Part #:	-	Material:	ABS PLASTIC		

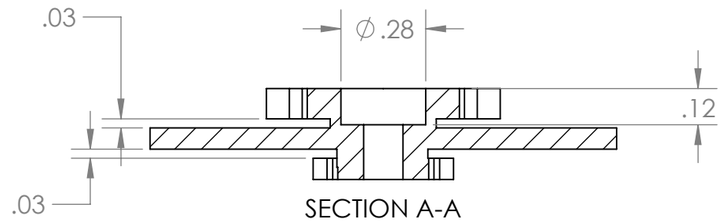

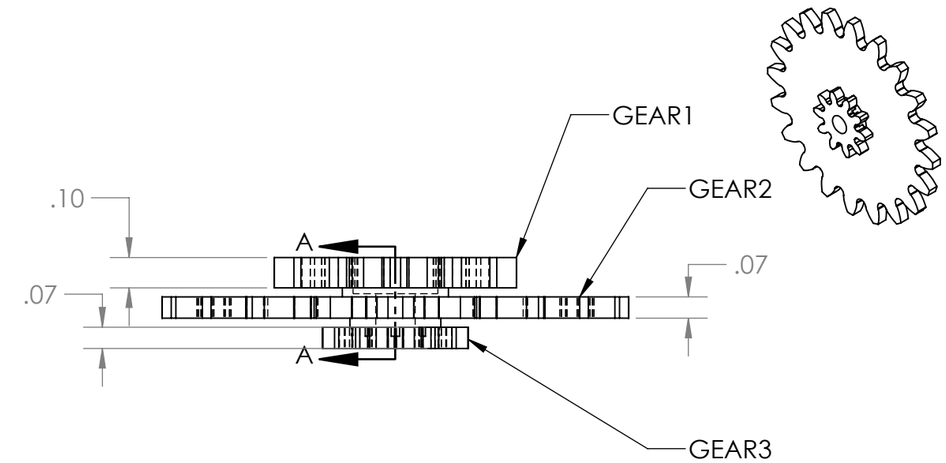

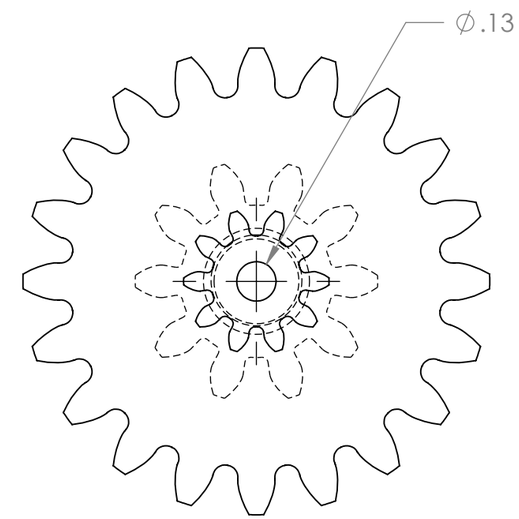

DIMENSIONS OF GEAR1

Pitch Diamter	.5
Diametral Pitch	20
Teeth	10
Pressure Angle	20
Face Width	0.07

DIMENSIONS OF GEAR2

Pitch Diamter	1.4
Diametral Pitch	14.2857
Teeth	20
Pressure Angle	20
Face Width	0.07

DIMENSIONS OF GEAR3

Pitch Diamter	.4
Diametral Pitch	25
Teeth	10
Pressure Angle	20
Face Width	0.07

Drawn by: Aiden Ankrum	Sheet #: 13	# of Sheets 15	Date: 12/15/2025	Scale: 2:1
Part name: freewheel-to-output-wheel-left	Part #: -	Material: ABS PLASTIC		

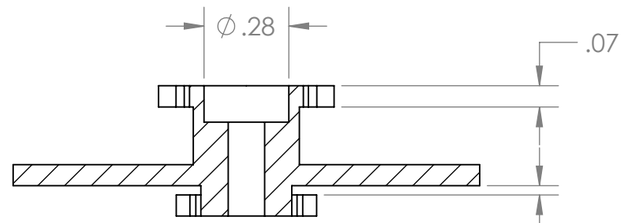

SECTION A-A

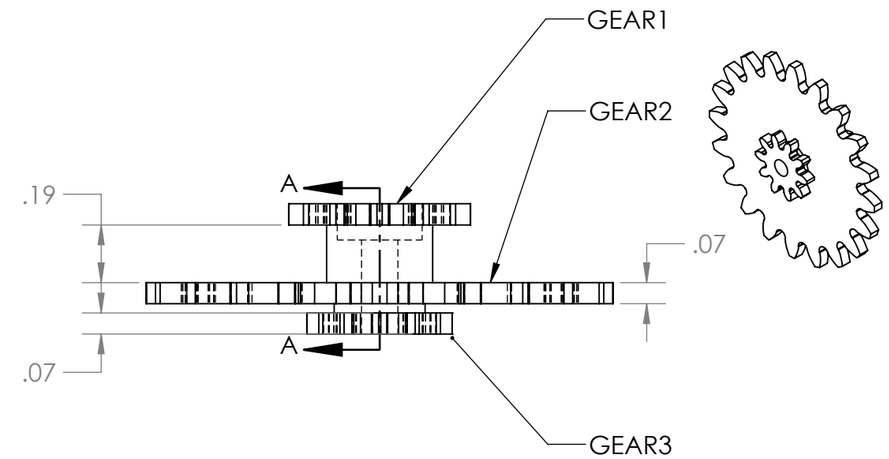

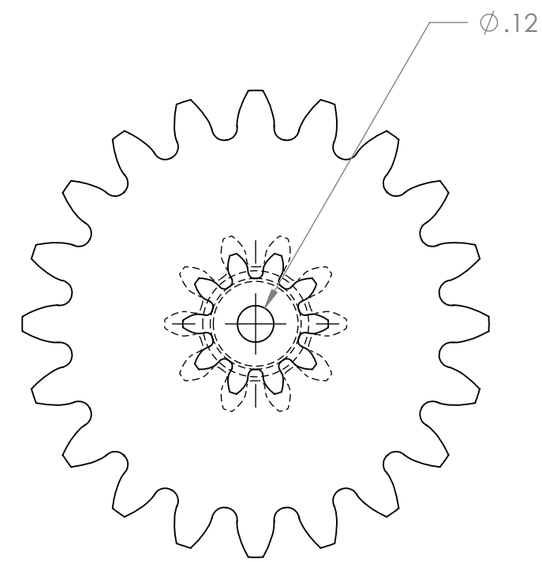

DIMENSIONS OF GEAR1

Pitch Diamter	.66
Diametral Pitch	15
Teeth	10
Pressure Angle	20
Face Width	0.07

DIMENSIONS OF GEAR2

Pitch Diamter	1.4
Diametral Pitch	14.2857
Teeth	20
Pressure Angle	20
Face Width	0.07

DIMENSIONS OF GEAR3

Pitch Diamter	.4
Diametral Pitch	25
Teeth	10
Pressure Angle	20
Face Width	0.07

Drawn by: Aiden Ankrum	Sheet #: 14	# of Sheets 15	Date: 12/15/2025	Scale: 2:1
Part name: freewheel-to-output-wheel-right	Part #: -	Material: ABS PLASTIC		

4 BUTTON HEAD HEX DRIVE SCREW
PART #: 92095A189
THREAD: M4
LENGTH = 8mm
REQ'D = 3

5 HEAT-SEAT INSERT FOR PLASTIC
PART #: 92095A170
THREAD: M4
LENGTH = 5.5mm
OD = 5.1mm
REQ'D = 3

6 ONE WAY LOCKING BALL BEARING CLUTCH
PART #: 475N11
OD = 10mm
ID = 8mm
DEPTH = 9mm
REQ'D = 2

8 freewheel
PART #: 620A316
OD = 1.6
ID = 1.34
TEETH = 16
REQ'D = 2

15 STAINLESS STEEL BALL BEARING
PART #: 7804K121
OD = 6mm
ID = 4mm
DEPTH = 2mm
REQ'D = 6

Drawn by: Aiden Ankrum	Sheet #: 15	# of Sheets 15	Date: 12/15/2025	Scale: -
Part name: -	Part #: -	Material: -		